Eaton UPS Accessories

External Battery Cabinets
Installation and Operation Manual

Powering Business Worldwide

IMPORTANT SAFETY INSTRUCTIONS SAVE THESE INSTRUCTIONS

This manual contains important instructions that you should follow during installation and maintenance of the EBC. Please read all instructions before operating the equipment and save this manual for future reference.

Table of Contents

List of Figures

List of Tables

Chapter 1 Introduction

The Eaton® External Battery Cabinet (EBC) provides extended emergency short-term backup power for the 93E 80-200 kVA, 93E 300–400 kVA and 93PM 50-200kW UPS to enhance the usability and reliability of the systems. The EBC safeguards operation during brownouts, blackouts, and other power interruptions providing cost-effective extended battery run time. Two models are available, the Single EBC and Double EBC and are equipped with valve-regulated lead-acid (VRLA) batteries.

The EBC is housed in a single free-standing cabinet with safety shields behind the doors for hazardous voltage protection. Up to two EBCs per UPS may be used to meet application runtime needs. The cabinets match the UPS cabinet in style and color.

Mechanical lugs located at the back of the cabinet reduce installation time, and removable battery trays with quick dosconnectors between trays reduce battery maintenance time. A DC-rated circuit breaker within each cabinet provides protection and servicing isolation.

Figure 1-1 shows the Eaton Single EBC and Eaton Double EBC.

NOTE Startup and operational checks must be performed by an authorized Eaton Customer Service Engineer, or the warranty terms specified become void. This service is offered as part of the sales contract for the EBC. Contact an Eaton service representative in advance (usually a two-week notice is required) to reserve a preferred startup date.

1.1 Installation Features

NOTE External battery cabinets cannot be used in combination with a UPS containing internal batteries. The UPS must be supplied without internal batteries.

The EBC is designed to be installed in a line-up-and-match or standalone configurations. In line-up-and-match configurations power wiring may be routed either external to the cabinet or pass wiring between adjacent cabinets. In standalone configurations power wiring is routed using external conduit. Connections are made to easily accessible terminals at the front of the cabinet.

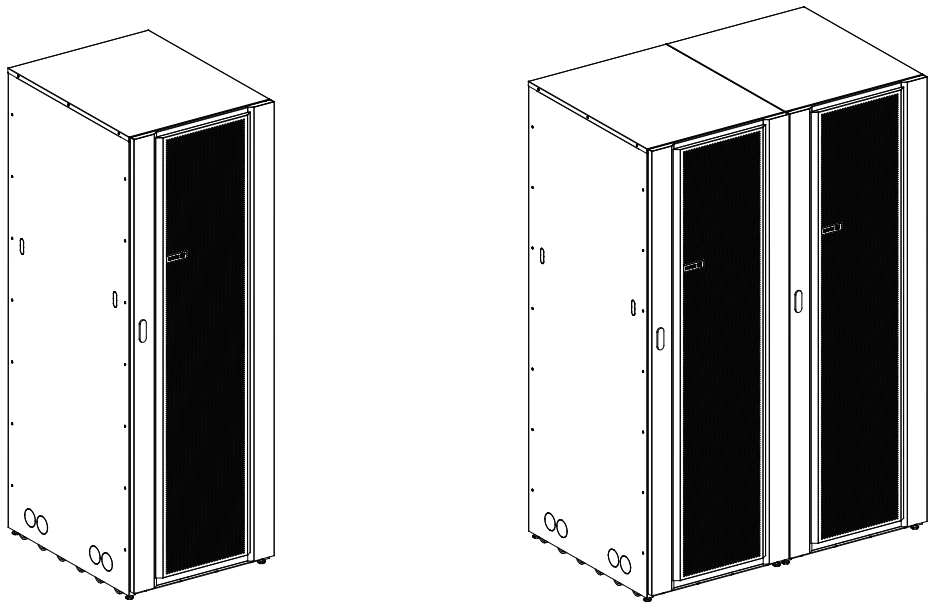

Eaton Single External Battery Cabinet

Eaton Double External Battery Cabinet

Figure 1-1. Eaton External Battery Cabinet

Line-up-and-match battery cabinets are installed adjacent to the UPS. The battery cabinets can be placed either on the left side or right side of the UPS.

See Figure 1-2 for line-up-and-match configuration views.

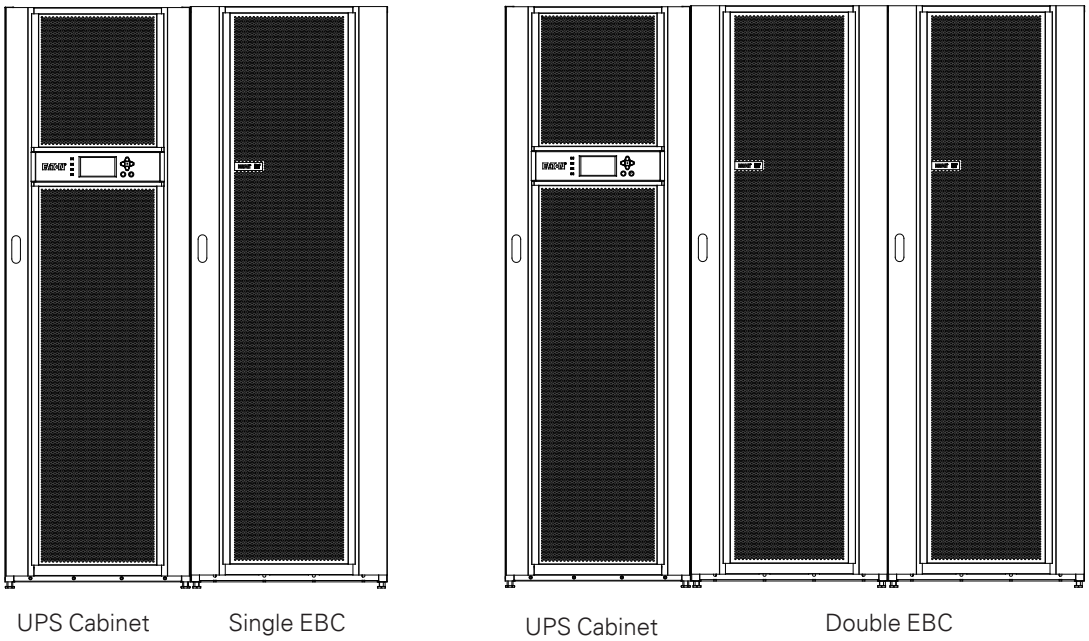

Figure 1-2. EBC and UPS Cabinet

1.2 Model Configurations

The following model configurations are available, Use CSB HRL and C&D MRX batteries for dimension reference:

- Single EBC:

  A single cabinet, fitted with battery circuit breaker and 5 trays, shall house 40 batteries of 200-320W/Cell rating.

- Double EBC:

  Two cabinets (for separate shipping and re-joining at final site), one of them fitted with circuit breaker and both fitted with 4 trays, shall house up to 40 batteries of 330W-620W/Cell.

1.3 Using This Manual

This manual describes how to install the EBC and is divided into chapters. Read and understand the procedures described to ensure trouble-free installation and operation.

Read through each procedure before beginning the procedure. Perform only those procedures that apply to the UPS system being installed or operated.

1.4 Conventions Used in This Manual

This manual uses these type conventions:

- Bold type highlights important concepts in discussions, key terms in procedures, and menu options, or represents a command or option that you type or enter at a prompt.
- Italic type highlights notes and new terms where they are defined.
- Screen type represents information that appears on the screen or LCD.

Icon	Description
Note	Information notes call attention to important features or instructions.
[Keys]	Brackets are used when referring to a specific key, such as [Enter] or [Ctrl].

In this manual, the term UPS refers only to the UPS cabinet and its internal elements. The term UPS system refers to the entire power protection system – the UPS cabinet, an external battery system, and options or accessories installed.

1.5 Symbols, Controls, and Indicators

The following are examples of symbols used on the UPS or accessories to alert you to important information:

RISK OF ELECTRIC SHOCK - Observe the warning associated with the risk of electric shock symbol.

CAUTION: REFER TO OPERATOR'S MANUAL - Refer to your operator's manual for additional information, such as important operating and maintenance instructions.

This symbol indicates that you should not discard the UPS or the UPS batteries in the trash. This product contains sealed, lead-acid batteries and must be disposed of properly. For more information, contact your local recycling/reuse or hazardous waste centre.

This symbol indicates that you should not discard waste electrical or electronic equipment (WEEE) in the trash. For proper disposal, contact your local recycling/reuse or hazardous waste centre.

1.6 For More Information

Refer to the Eaton 93E UPS (80-200 kVA, 380/400/415V) Installation and Operation Manual or Eaton 93E UPS (300-400kVA, 380/400/415V) or 93PM UPS (50-200kW, 380/400/415V) Installation and Operation Manual for the following additional information:

- UPS, optional components, and accessory installation instructions, including site preparation, planning for installation, and wiring and safety information. Detailed illustrations of cabinets and optional accessories with dimensional and connection point drawings are provided.
- UPS operation, including UPS controls, functions of the UPS, standard features and optional accessories, procedures for starting and stopping the UPS, and information about maintenance and responding to system events.
- Communication capabilities of the UPS system.

1.7 Getting Help

If help is needed with any of the following:

- Scheduling initial startup
- Regional locations and telephone numbers
- A question about any of the information in this manual
- A question this manual does not answer

Please call your local service representative.

Chapter 2 Safety Warnings

IMPORTANT SAFETY INSTRUCTIONS SAVE THESE INSTRUCTIONS

This manual contains important instructions that should be followed during installation and maintenance of the accessories and batteries. Read all instructions before operating the equipment and save this manual for future reference.

The Accessories are designed for industrial or computer room applications with UPS, and contains safety shields behind the door and front panels. However, any installation and operations should be handled with appropriate care.

DANGER

The Accessories may contain LETHAL VOLTAGES. All repairs and service should be performed by AUTHORISED SERVICE PERSONNEL ONLY.

WARNING

- The Accessories are suitable for mounting on concrete or other non-combustible surfaces only.
- The terminals may carry live voltage even when the Accessory is connected to UPS.
- To reduce the risk of fire or electric shock, install the Accessory and UPS in a temperature and humidity controlled, indoor environment, free of conductive contaminants. Ambient temperature must not exceed 40°C (104°F). Do not operate near water or excessive humidity (95% maximum).
- As a result of the connected loads high leakage current is possible. Connection to earth ground is required for safety and proper product operation. Do not check Accessory or UPS operation by any action that includes removal of the earth (ground) connection with loads attached.
- Ensure all power is disconnected before performing installation or service.
- Batteries can present a risk of electrical shock or burn as high short-circuits current. The following precautions should be observed: 1) Remove watches, rings, or other metal objects;2) Use tools with insulated handles; 3) Do not lay tools or metal parts on top of batteries; 4) Wear rubber gloves and boots.
- ELECTRIC ENERGY HAZARD. Do not attempt to alter any Accessory, UPS or battery wiring or connectors. Attempting to alter wiring can cause injury.
- Do not open or mutilate batteries. Released electrolyte is harmful to the skin and eyes. It may be toxic.

CAUTION

- Installation or service should be performed by qualified service personnel knowledgeable of UPS, UPS Accessory and battery systems, and required precautions. Keep unauthorized personnel away from equipment. Consider all warnings, cautions, and notes before installing or servicing equipment. DO NOT DISCONNECT the batteries while the UPS is in Battery mode.
- Batteries may only be replaced with the same number and type by authorized service personnel. No user serviceable parts.
- The UPS system has been evaluated for use with a maximum of two EBCs (Double EBC). Use of any other configuration may result in fire, death, and voiding of the warranty.
- Disconnect the charging source prior to connecting or disconnecting battery terminals.
- Determine if the battery is inadvertently grounded. If it is, remove the source of the ground.
- Contacting any part of a grounded battery can cause a risk of electric shock. An electric shock is less likely if you disconnect the grounding connection before you work on the batteries.

- Proper disposal of batteries is required. Refer to local codes for disposal requirements.
- Do not dispose of batteries in a fire. Batteries may explode when exposed to flame.
- Keep the Accessory cabinet doors closed and front panels installed to ensure proper cooling airflow and to protect personnel from dangerous voltages inside the unit.
- Do not install or operate the UPS system close to gas or electric heat sources.
- The operating environment should be maintained within the parameters stated in this manual.
- Operating temperatures above the recommended range will result in decreased battery life and performance, and will reduce or void the battery warranty. Refer to Terms and Conditions of Sale with Battery Replacement Coverage and the Battery Replacement Price Book for more information. These documents can be found at www.eaton.com/powerquality or contact your service representative for information on how to obtain copies.
- Keep surroundings uncluttered, clean, and free from excess moisture.
- Observe all DANGER, CAUTION, and WARNING notices affixed to the inside and outside of the equipment

AVERTISSEMENT!

- Les batteries peuvent présenter un risque de décharge électrique ou de brûlure par des courts–circuits de haute intensité. Prendre les précautions nécessaires.
- Pour le replacement, utiliser le même nombre et modéle des batteries.

ATTENTION!

- Une mise au rebut réglementaire des batteries est obligatoire. Consulter les règlements en vigueur dans votre localité.
- Ne jamais jeter les batteries au feu. L'exposition aux flammes risque de les faire exploser.

Chapter 3 EBC Installation Plan and Unpacking

Use the following basic sequence of steps to install the Eaton 93E and 93PM External Battery Cabinet:

1. Create an installation plan for the EBC.
2. Prepare your site for the EBC.
3. Inspect and unpack the EBC.
4. Unload and install the EBC, and wire the system.
5. Complete the Installation Checklist.
6. Have authorized service personnel perform preliminary operational checks and start up the system.

NOTE Startup and operational checks for parallel systems or installations with accessory cabinets must be performed by an authorized Eaton Customer Service Engineer, or the warranty terms may become void. This service is offered as part of the sales contract for the UPS. Contact an Eaton service representative in advance (usually a two-week notice is required) to reserve a preferred startup date.

CAUTION

It must be ensured that no line input source can accidentally be connected to the UPS during the UPS and Accessory installation.

WARNING

- Installation may only be carried out by qualified technicians and in conformity with the applicable safety standards.
- The UPS and Accessory are not suitable for IT or corner-earthed power distribution systems.

3.1 Creating an Installation Plan

Before installing the EBC, read and understand how this manual applies to the system being installed. Use the procedures and illustrations in this section to create a logical plan for installing the EBC. This section contains the following information:

- Physical features and requirements, including dimensions
- Power wiring installation notes
- Location of conduit and wire entry landing plates
- Location of power terminals

3.2 Preparing the Site

Similar with the UPS, the EBC installation site should meet the environmental parameters outlined in this manual. If the UPS is to be operated at an altitude higher than 1000m (3300 ft.), contact an Eaton service representative for important information about high altitude operation. The operating environment must meet the weight, clearance, and environmental requirements specified.

3.2.1 Environmental and Installation Considerations

The UPS system installation, including the EBC, must meet the following guidelines:

- The system must be installed on a level floor or stiff wall which is suitable for computer or electronic equipment.
- Suitable for mounting on concrete or other non-combustible surfaces only.
- The system must be installed in a temperature and humidity controlled indoor.

Failure to follow guidelines may void your warranty.

The EBC operating environment must meet the weight requirements shown in Table 3-1 and the size requirements shown in Figure 3-1 through Figure 3-4. Dimensions are in millimetres (inches).

Table 3-1. EBC Cabinet Weights

Model		Weight kg (lb)		
		Shipping	Installed	Point Loading
Eaton Single EBC without batteries	with breaker	304 (670)	237(522)	20 (44)/wheel (total 12 wheels)
Eaton Double EBC without batteries	without breaker	289 (637)	221(487)	18 (41)/wheel (total 12 wheels)
	with breaker	291(641)	224(493)	19 (41)/wheel (total 12 wheels)

NOTE The weight of EBC with batteries is calculated by adding the weight of battery.

The EBC cabinet uses convection cooling to regulate internal component temperature. Air inlets are in the bottom of the cabinet and outlets are in the front of the cabinet. Allow clearance in front of the cabinet for proper air circulation. No special rear clearances required for the EBCs, other clearances around the EBC cabinet are shown in Table 3-2

Table 3-2. EBC Cabinet Clearances

From Top of Cabinet	No required
From Front of Cabinet	900 mm (36") working space
From Back of Cabinet	No required
From Right Side of Cabinet	No required
From Left Side of Cabinet	No required

The basic environmental requirements for operation of the UPS and Accessories are:

- Ambient Temperature Range: 0–40°C (32–104°F)
- Recommended Operating Range: 20–25°C (68–77°F)
- Maximum Relative Humidity: 95%, noncondensing

CAUTION

Operating temperatures above the recommended range will result in decreased battery life and performance, and will reduce or void the battery warranty. Refer to Eaton's Terms and Conditions of Sale with Battery Replacement Coverage and the Battery Replacement Price Book for more information. These documents can be found at www.eaton.com/powerquality or contact your service representative for information on how to obtain copies.

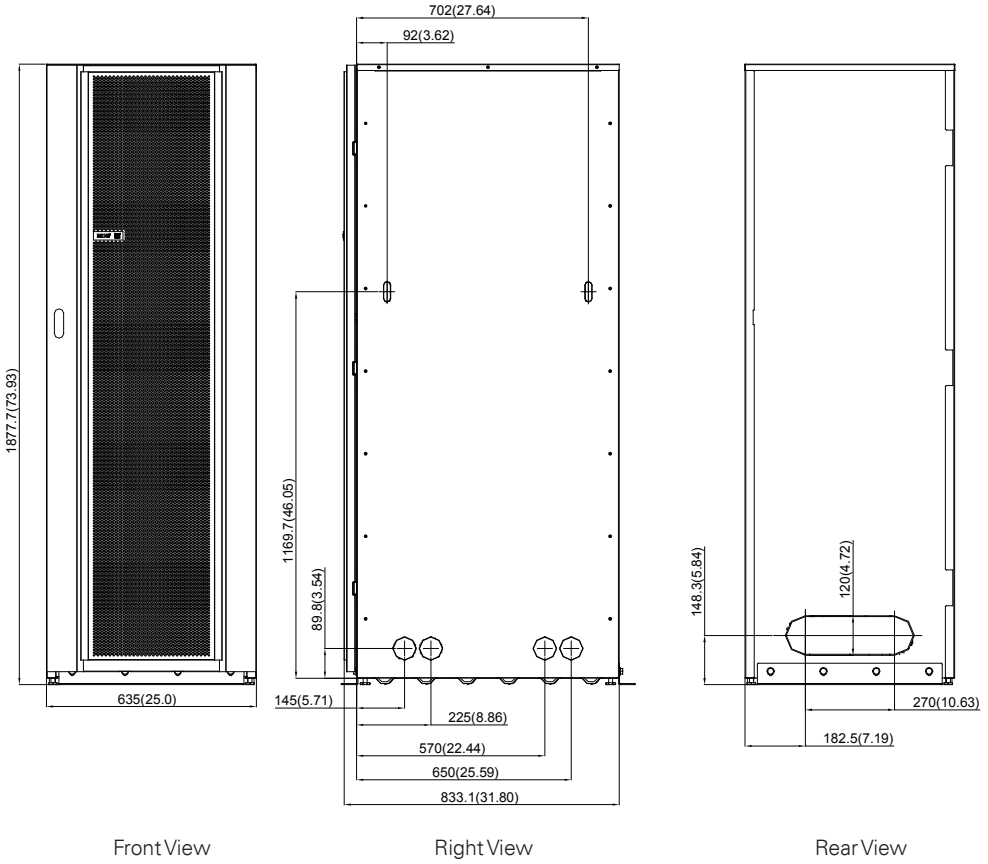

Figure 3-1. Single EBC Dimensions (Front and Right Side Views)

Dimensions are in millimetres [inches]

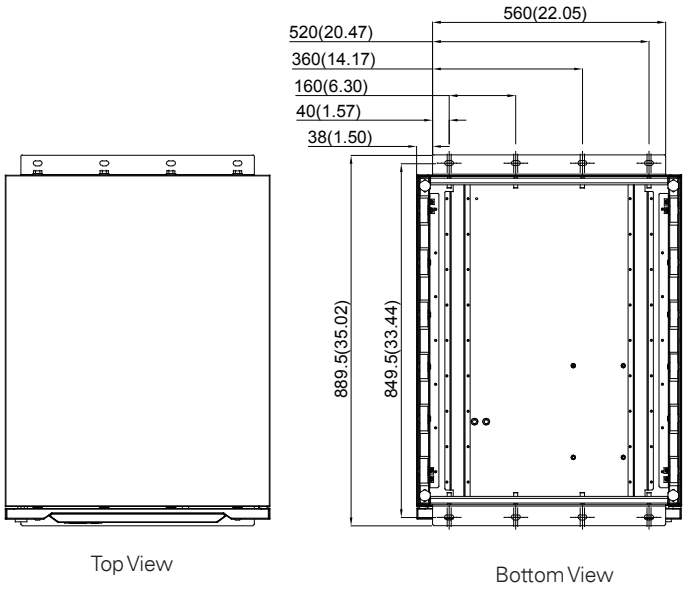

Figure 3-2. Single EBC Dimensions (Top and Bottom Views)

Dimensions are in millimetres [inches]

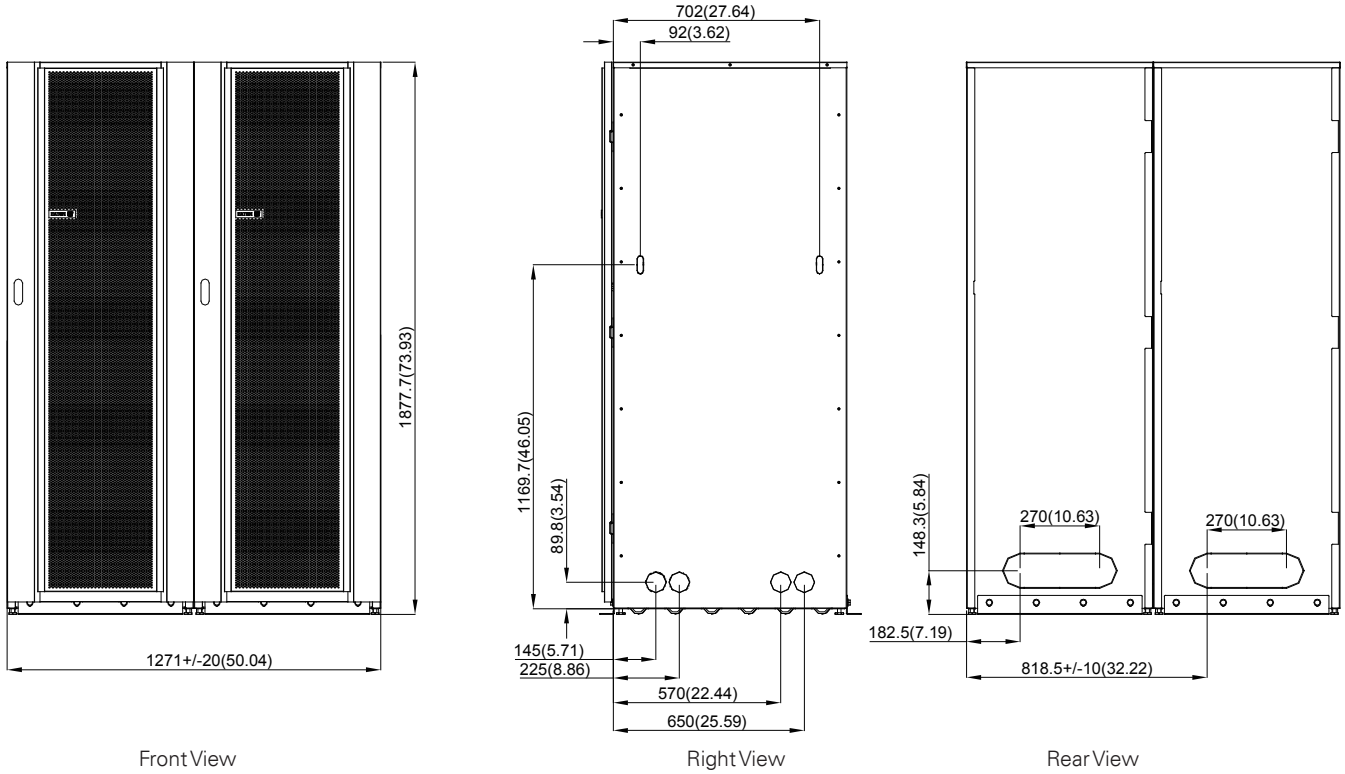

Figure 3-3. Double EBC Dimensions (Front and Right Side Views)

Dimensions are in millimetres [inches]

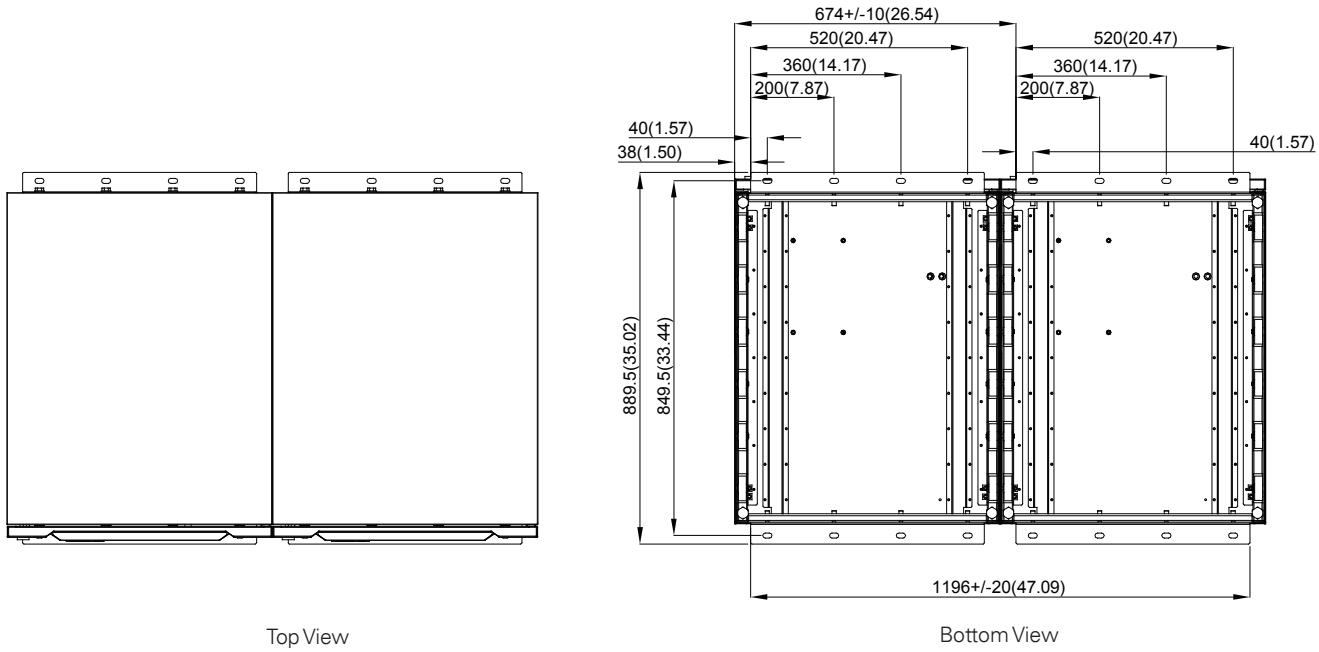

Figure 3-4. Double EBC Dimensions (Top and Bottom Views)

Dimensions are in millimetres [inches]

3.2.2 EBC Power Wiring Preparation

Read and understand the following notes while planning and performing the installation:

WARNING

As a result of the connected loads high leakage current is possible. Connection to earth ground is required for safety and proper product operation. Do not check EBC operation by any action that includes removal of the earth (ground) connection with loads attached.

- Refer to national and local electrical codes for acceptable external wiring practices.
- Material and labor for external wiring requirements are to be provided by the customer.
- For external wiring, use 90°C copper wire. Wire sizes listed in Table 3-3 are for copper wiring only. If wire is run in an ambient temperature greater than 30°C, higher temperature wire and/or larger size wire may be necessary. Wire sizes are based on using the specified breakers.
- The battery wiring used between the battery and the UPS should be a maximum of 20 metres (65 feet) and not allow a voltage drop of more than 1% of nominal DC voltage at rated battery current.
- The battery cabinet frame is not referenced to the DC circuit.
- External battery cabinets cannot be used in combination with a UPS containing internal batteries. The UPS must be supplied without internal batteries.
- Internal battery strings are to be connected by an authorized Eaton Customer Service Engineer.
- Refer to the appropriate Eaton 93E 80-200kVA, 93E 300-400kVA and 93PM 50-200kW UPS Installation and Operation manual listed in corresponding paragraph for UPS cabinet conduit and terminal specifications and locations.
- The term line-up-and-match refers to accessory cabinets that are physically located adjacent to the UPS. The term standalone refers to accessory cabinets that are located separate from the UPS.

Figure 4-5 show the location of the EBC power cable terminals.

For external power wiring requirements, including the minimum size of external wiring, see Table 3-3. Wire sizes listed are for copper wiring only.

NOTE

- All specified wire sizes are 90°C rated copper minimum.
- Replace with same type and number of original battery. Mixing battery letter designation and or sizes will damage equipment and void warranty.

External Cables from EBC breaker to ups are to be provided by the user. Table 3-3 lists the maximum rating for continuous-duty cables satisfying the criteria. Other ratings configuration please contact with Eaton.

Table 3-3. External Power Wiring Requirements for 93E and 93PM

Model	UPS Model Rating			Number of Cabinets	Terminal	Battery cabinet to UPS or Next Battery Cabinet				
		kVA	kW			Minimum conductor size (mm^2)	Number per pole	Number and size of Pressure termination	Tightening Torque Nm (lb in)	screw size and type
Eaton Single EBC	93PM		30-50	1,2,3,4	Battery+	35	1	1-M10-Bolt Monting	40(354)	M10 Hex
					battery-	35	1	1-M10-Bolt Monting	40(354)	M10 Hex
					Ground	35	1	1-M10-Bolt Monting	40(354)	M10 Hex
			80-100	1,2,3,4	Battery+	95	1	1-M10-Bolt Monting	40(354)	M10 Hex
					battery-	95	1	1-M10-Bolt Monting	40(354)	M10 Hex
					Ground	95	1	1-M10-Bolt Monting	40(354)	M10 Hex
			120	1,2,3,4	Battery+	185	1	1-M10-Bolt Monting	40(354)	M10 Hex
					battery-	185	1	1-M10-Bolt Monting	40(354)	M10 Hex
					Ground	185	1	1-M10-Bolt Monting	40(354)	M10 Hex
	93E	80	72	1,2,3,4	Battery+	35	1	1-M10-Bolt Monting	40(354)	M10 Hex
					battery-	35	1	1-M10-Bolt Monting	40(354)	M10 Hex
					Ground	35	1	1-M10-Bolt Monting	40(354)	M10 Hex
		100	90	1,2,3,4	Battery+	50	1	1-M10-Bolt Monting	40(354)	M10 Hex
					battery-	50	1	1-M10-Bolt Monting	40(354)	M10 Hex
					Ground	50	1	1-M10-Bolt Monting	40(354)	M10 Hex
		120	108	1,2,3,4	Battery+	70	1	1-M10-Bolt Monting	40(354)	M10 Hex
					battery-	70	1	1-M10-Bolt Monting	40(354)	M10 Hex
					Ground	70	1	1-M10-Bolt Monting	40(354)	M10 Hex
Eaton Double EBC	93PM		30-50	1,2,3,4	Battery+	35	1	1-M10-Bolt Monting	40(354)	M10 Hex
					battery-	35	1	1-M10-Bolt Monting	40(354)	M10 Hex
					Ground	35	1	1-M10-Bolt Monting	40(354)	M10 Hex
			80-100	1,2,3,4	Battery+	95	1	1-M10-Bolt Monting	40(354)	M10 Hex
					battery-	95	1	1-M10-Bolt Monting	40(354)	M10 Hex
					Ground	95	1	1-M10-Bolt Monting	40(354)	M10 Hex
			120-150	1,2,3,4	Battery+	185	1	1-M10-Bolt Monting	40(354)	M10 Hex
					battery-	185	1	1-M10-Bolt Monting	40(354)	M10 Hex
					Ground	185	1	1-M10-Bolt Monting	40(354)	M10 Hex
			200	1,2,3,4	Battery+	300	1	1-M10-Bolt Monting	40(354)	M10 Hex
					battery-	300	1	1-M10-Bolt Monting	40(354)	M10 Hex
					Ground	300	1	1-M10-Bolt Monting	40(354)	M10 Hex
	93E	80	72	1,2,3,4	Battery+	35	1	1-M10-Bolt Monting	40(354)	M10 Hex
					battery-	35	1	1-M10-Bolt Monting	40(354)	M10 Hex
					Ground	35	1	1-M10-Bolt Monting	40(354)	M10 Hex
		100	90	1,2,3,4	Battery+	50	1	1-M10-Bolt Monting	40(354)	M10 Hex
					battery-	50	1	1-M10-Bolt Monting	40(354)	M10 Hex
					Ground	50	1	1-M10-Bolt Monting	40(354)	M10 Hex
		120	108	1,2,3,4	Battery+	70	1	1-M10-Bolt Monting	40(354)	M10 Hex
					battery-	70	1	1-M10-Bolt Monting	40(354)	M10 Hex
					Ground	70	1	1-M10-Bolt Monting	40(354)	M10 Hex
		160	144	1,2,3,4	Battery+	185	1	1-M10-Bolt Monting	40(354)	M10 Hex
					battery-	185	1	1-M10-Bolt Monting	40(354)	M10 Hex
					Ground	185	1	1-M10-Bolt Monting	40(354)	M10 Hex
		200	180	1,2,3,4	Battery+	300	1	1-M10-Bolt Monting	40(354)	M10 Hex
					battery-	300	1	1-M10-Bolt Monting	40(354)	M10 Hex
					Ground	300	1	1-M10-Bolt Monting	40(354)	M10 Hex

3.3 Battery Type

The recommended battery types listed in Table 3-4 are supplied in the EBC. Use of mixing battery letter designation and sizes inside Eaton cabinets will damage equipment and void the product warranty. When replacing batteries use the same manufacturer and part number originally supplied with the unit to ensure correct harness fit and terminal landing.Using other battery types not listed in the below table please cotact on Eaton representive.

Table 3-4. Battery Type

Battery Manufacturer	CSB		C&D	
Battery Model	HRL 12200W	HRL 12330W	UPS12-200 MRX	UPS12-370MRX
	HRL 12280W	HRL 12390W	UPS12-220 MRX	UPS12-400 MRX
	XHRL 12360W	XHRL 12410W	UPS12-280 MRX	UPS12-440MRX
		XHRL 12475W	UPS12-320 MRX	UPS12-475 MRX
		HRL 12500W		UPS12-490MRX
		XHRL 12620W		UPS12-520 MRX
				UPS12-550MRX
				UPS12-600 MRX
				UPS12-630 MRX
Battery Quantity--Eaton Single EBC	40 per string, 1 string per cabinet		40 per string, 1 string per cabinet	
Battery Quantity--Eaton Double EBC		40 per string, two cabinets 1 string		40 per string, two cabinets 1 string

3.4. Inspecting and Unpacking the EBC

The cabinet is shipped bolted to a wooden pallet and covered with outer protective packaging material (see Figure 3-5)..

NOTE Startup and operational checks must be performed by an authorized Eaton Customer Service Engineer, or the warranty terms specified become void. This service is offered as part of the sales contract for the UPS. Contact an Eaton service representative in advance (usually a two-week notice is required) to reserve a preferred startup date.

WARNING

The Accessory cabinet is heavy, if unpacking and unloading instructions are not closely followed, the cabinet may tip and cause serious injury. If the batteries are installed into the cabinet on site, to avoid injury the loaded battery trays should be installed into the cabinet using a forklift.

1. Carefully inspect the outer packaging for evidence of damage during transit.

CAUTION

Do not install a damaged cabinet. Report any damages to the carrier and contact an Eaton service representative immediately.

NOTE For the following step, verify that the forklift or pallet jack is rated to handle the weight of the cabinets (see Table 3-1 for cabinet weight).

2. Use a forklift or pallet jack to move the packaged cabinet to the installation site, or as close as possible, before unpacking. If possible, move the cabinets using the pallet. Insert the forklift or pallet jack forks between the supports on the bottom of the pallet .

CAUTION

- Do not tilt the EBC cabinets more than 10° from vertical or the cabinets may tip over.
- Take care of drop when lift the EBC from carton.

3. Set the pallet on a firm, level surface, allowing a minimum clearance of 3m (10 ft) on each side for removing the cabinet from the pallet.

4. Remove the protective wood/carton container from the cabinet:

NOTE For the following steps, use pincer type pliers or a large flat blade screw driver to straighten the securing tabs.

   a. Straighten the tabs securing the top panel of the wooden container to the side panels of the container.

   b. Remove the top panel and retain for later use as a ramp in unloading the cabinet from the pallet.

   c. Straighten the tabs securing the side panels of the container to the front and back panels of the container.

   d. Remove the side panels.

   e. Straighten the tabs securing the front and back panels of the container to the bottom of the container.

   f. Remove the front and back panels.

5. Remove the inner protective packaging. Retain the parts kit box, ramp brackets, and ramp extension packed at the top of the cabinet.

6. Recycle the remainder of the outer shipping container and the inner protective packaging in a responsible manner.

7. Inspect the contents for any evidence of physical damage, and compare each item with the Bill of Lading. If damage has occurred or shortages are evident, contact an Eaton service representative immediately to determine the extent of the damage and its impact on further installation.

NOTE While waiting for installation, protect the unpacked cabinet from moisture, dust, and other harmful contaminants. Failure to store and protect the EBC properly may void your warranty.

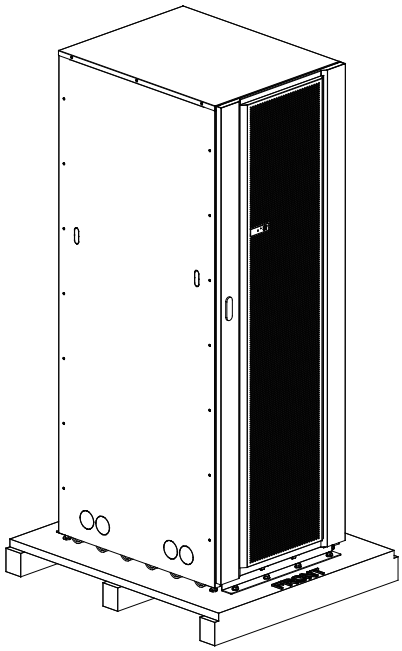

Figure 3-5. EBC Cabinet as Shipped on Pallet (wood container removed)

3.5. Battery Breaker Location

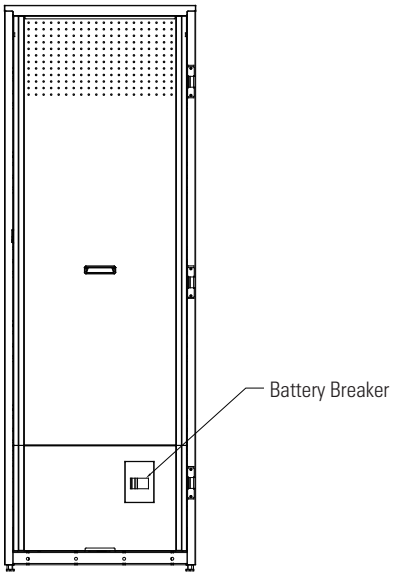

Figure 3-6. Battery Breaker Location

Chapter 4 EBC Installation

4.1 Preliminary Installation Information

WARNING

Installation should be performed only by qualified personnel knowledgeable of batteries and the required precautions.

Refer to the following while installing the EBC:

- To review the UPS manual, Chapter 3 of this manual for cabinet dimensions, equipment weight, wiring and installation notes.
- Do not tilt the cabinets more than ±10° during installation.
- Suitable for mounting on concrete or other non-combustible surfaces only.

4.2 Unloading the EBC Cabinet from the Pallet

The EBC is bolted to a wooden pallet supported by wood skids.

WARNING

The EBC cabinet is heavy (see Table 3-1). If unpacking and unloading instructions are not closely followed, the cabinet may tip and cause serious injury.

CAUTION

- Do not tilt cabinet more than 10° from vertical.
- Lift the cabinets only with a forklift or damage may occur.

NOTE The EBC uses inline wheels, not swivel casters. When moving the EBC, move the cabinet in straight lines as much as possible, minimizing turns.

For the following steps, verify that the forklift or pallet jack is rated to handle the weight of the cabinet (see Table 3-1 for cabinet weight).

1. If not already accomplished, use a forklift or pallet jack to move the EBC cabinet to the installation area, or as close as possible, before unloading from the pallet. Insert the forklift or pallet jack forks between the supports on the bottom of the pallet.
2. Remove four bolts securing the front shipping bracket to the cabinet and four bolts securing the bracket to the pallet (see Figure 4-1). Remove the front shipping bracket. If installing the cabinet permanently, retain the shipping bracket and securing hardware for later use.
3. Attach the ramp to the front of the pallet (see Figure 4-2):
   a. Locate the ramp (top panel from wood container), ramp extension, and ramp brackets with M10 bolts.
   b. Place the ramp against the front of the pallet.
   c. Attach the ramp extension to the front of the ramp by inserting the tabs on the extension into the slots at the bottom of the ramp.
4. If the leveling feet are not fully retracted, turn the leveling feet until they are retracted.
5. Remove four bolts securing the rear shipping bracket to the cabinet and four bolts securing the bracket to the pallet (see Figure 4-3). Remove the rear shipping bracket. If installing the cabinet permanently, retain the shipping bracket and securing hardware for later use.

6. Slowly roll the cabinet toward the front of the pallet. Continue rolling the cabinet down the ramp until the cabinet is clear of the ramp (see Figure 4-4).
7. Roll the cabinet to the final installation location.
8. If installing the cabinet permanently, retain the shipping brackets and hardware; otherwise, recycle the pallet, ramp, and shipping brackets in a responsible manner.
9. Secure the EBC in position by lowering the leveling feet until the cabinet is not resting on the casters and the cabinet is level.
10. If permanently mounting the system, proceed to Step 11;
11. Using the retained hardware, reinstall the shipping brackets removed in Step 2 and Step 5 to the front and rear of the EBC with the angle facing outward (see Figure 4-1 and Figure 4-3).
12. Secure the cabinet to the floor with customer-supplied hardware.

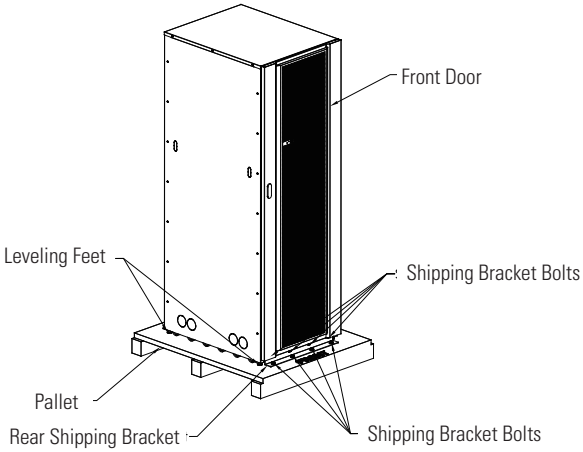

Figure 4-1. Removing the Front Shipping Bracket

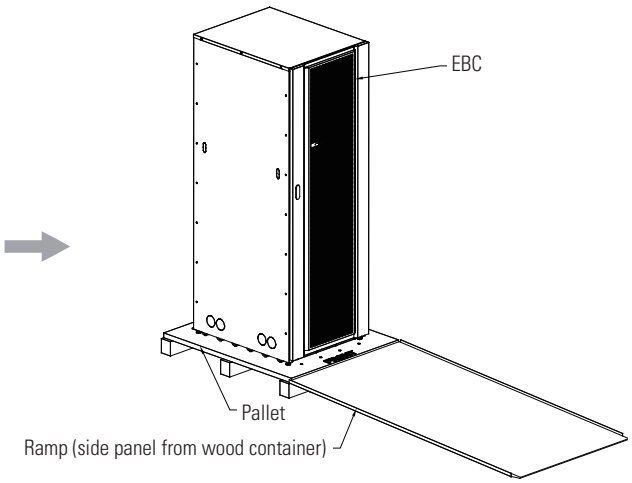

Figure 4-2. Attaching the Ramp to the Pallet

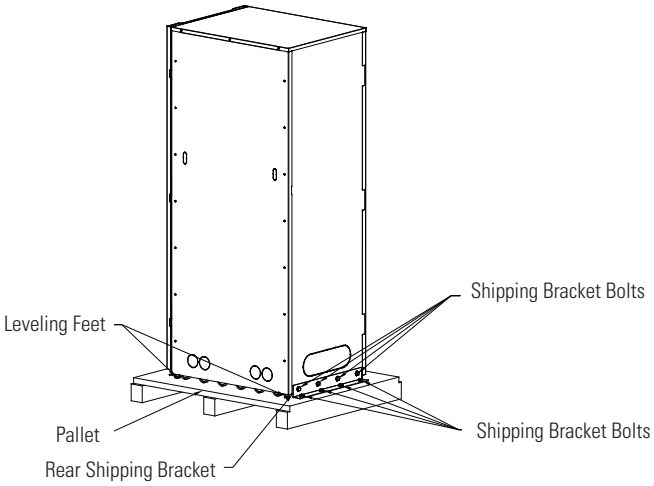

Figure 4-3. Removing the Rear Shipping Bracket

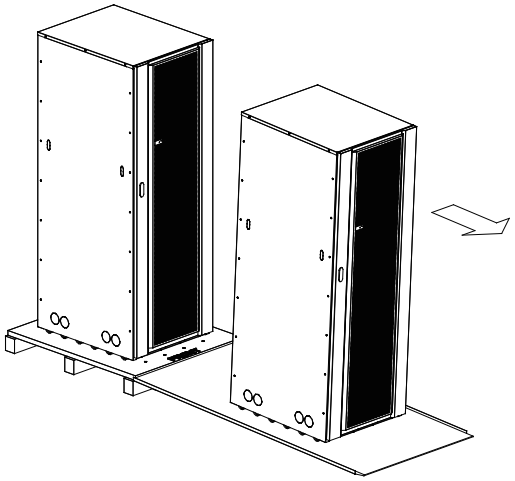

Figure 4-4. Rolling the Cabinet Down the Ramp

4.3 External Power Cables Connecting

NOTE Wires enter/out from rear bottom or knock-out holes on 2 side plates.

WARNING

- TURN OFF UPS AND DISCONNECT UPS FROM POWER SUPPLY BEFORE EBC INSTALLATION.
- HIGH TOUCH CURRENT. EARTH CONNECTION MUST BEFORE CONNECTING SUPPLY. As a result of the connected loads high leakage current is possible. Connection of the earth (ground) is required for proper product operation. Do not check UPS operation by removal of the Earth (ground) connection.

To install wires:

1. Remove the knock-outs in the left or right side plates on the EBC. See Figure 4-9. Refer to the applicable UPS Installation and Operation manual or UPS cabinet conduit landing location.
2. Install conduit between the UPS cabinet and the EBC if needed. If installing a second EBC, install conduit between the first and second EBCs.

WARNING

Verify polarity of connections. Risk of personal injury and damage to equipment from arc flash if connections are reversed.

3. Connect the positive (+) and negative (-) power wiring to the DC (+) and DC (-) terminals on EBC 1. Connect the ground wiring to the ground terminal on EBC 1. See Figure 4-5.
4. Route and connect the other end of the battery cables (positive, negative, and ground) to the UPS DC (+), DC (-) and ground terminals. Refer to the applicable Eaton UPS Installation and Operation manual or UPS cabinet terminal locations and termination requirements.
5. Let the EBC stand side by side to the UPS and secure the DC battery cables to the EBC bottom base using wire ties after all electrical connections have been completed.
6. If installing Double EBC (2 cabinets and one cabinet with breaker), proceed to Step 7-12.
7. Route the battery cables (positive, negative, and ground) from EBC 1(with breaker) DC and ground terminals to EBC 2 DC and ground terminal blocks. See Figure 4-5,Figure 4-6 and Figure 4-9 for wiring access information and terminal locations. See paragraph 3.2.2, Table 3-3 for wiring and termination requirements.
8. Connect the positive (+) and negative (-) power wiring to the DC (+) and DC (-) terminals in EBC 2. Connect the ground wiring to the ground terminal in EBC 2. See Figure 4-5.
9. Let the 2 battery cabinets stand side by side
10. Route the battery cables (positive, negative, and ground) from the UPS to the EBC 1(with breaker) DC and ground terminal blocks. See Figure 4-5 and Figure 4-9 for wiring access information and terminal locations. See paragraph 3.2.2, Table 3-3 for wiring and termination requirements.
11. Let the EBCs stand side by side to the UPS and secure the DC battery cables to the EBC bottom base using wire ties after all electrical connections have been completed.

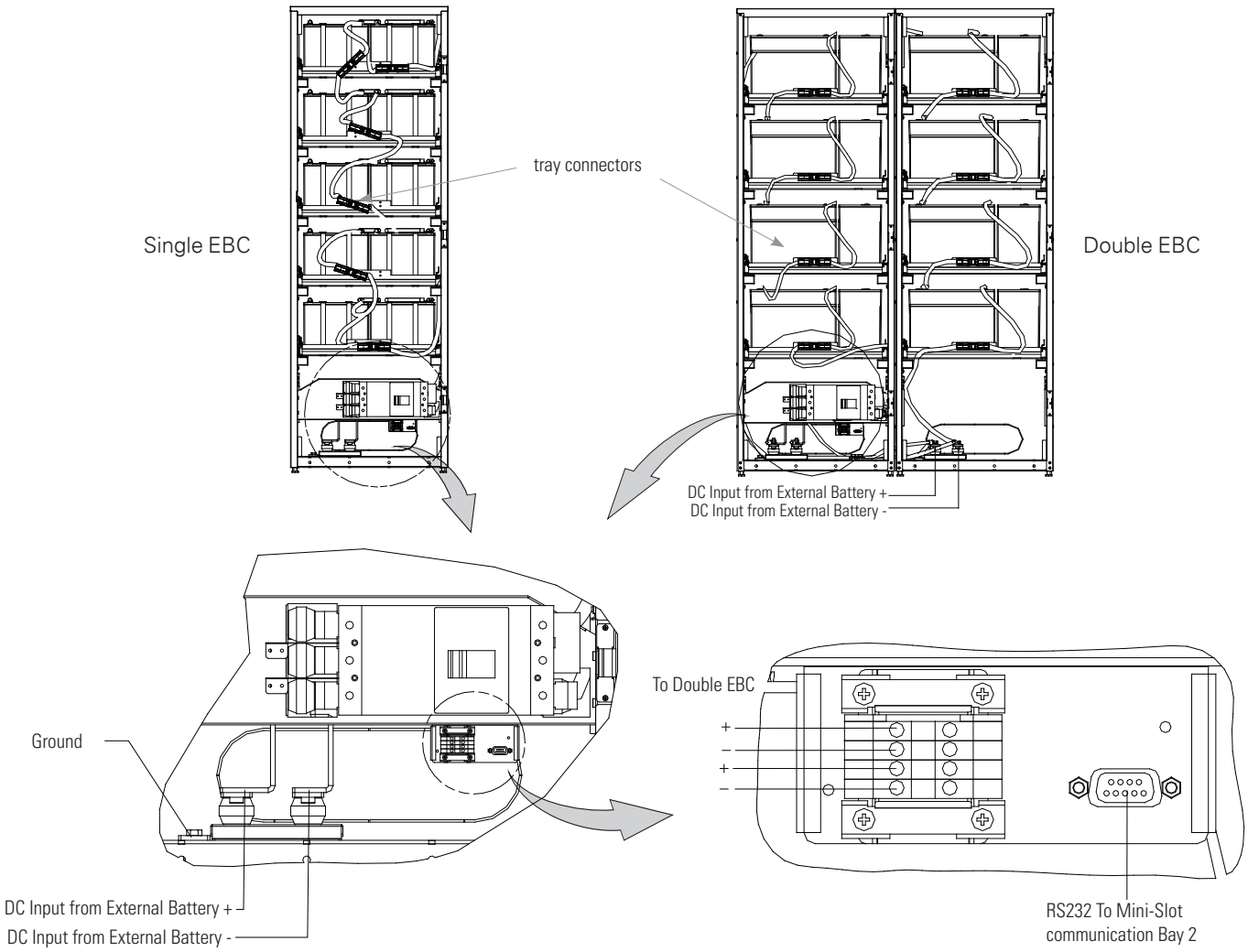

Figure 4-5. Power and signal Terminal Locations

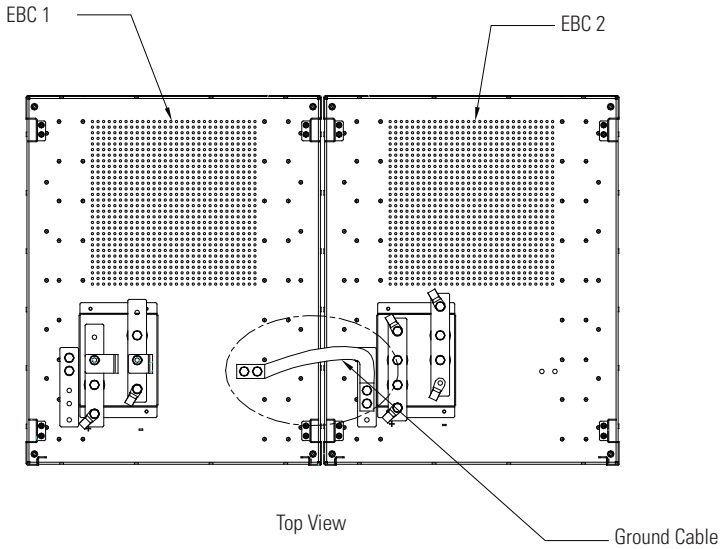

Figure 4-6. Ground Terminal Locations (Double EBC)

4.4 Battery and cable Installation

Before install the battery, to avoid the battery move please fix the battery cabinet on the ground with the shipping bracket that is fixed the battery cabinet on the pallet. See Figure4-1.

1. Slide the battery tray out of cabinet.
2. Install the battery on the battery tray ,wrap the battery with strap and secure to the battery tray. In a single EBC each tray holds 8 batteries. In a Double EBC each tray holds 5 batteries. See Figure4-7.
3. Route and connect the battery cables. Notice that last battery positive connect to the next battery negative. See figure 4-7.
4. Install the battery tray on the battery cabinet.
5. Repeat step 1 to step 4 until finishing the total battery installation.
6. Connect the battery connectors between trays. See Figure 4-5.

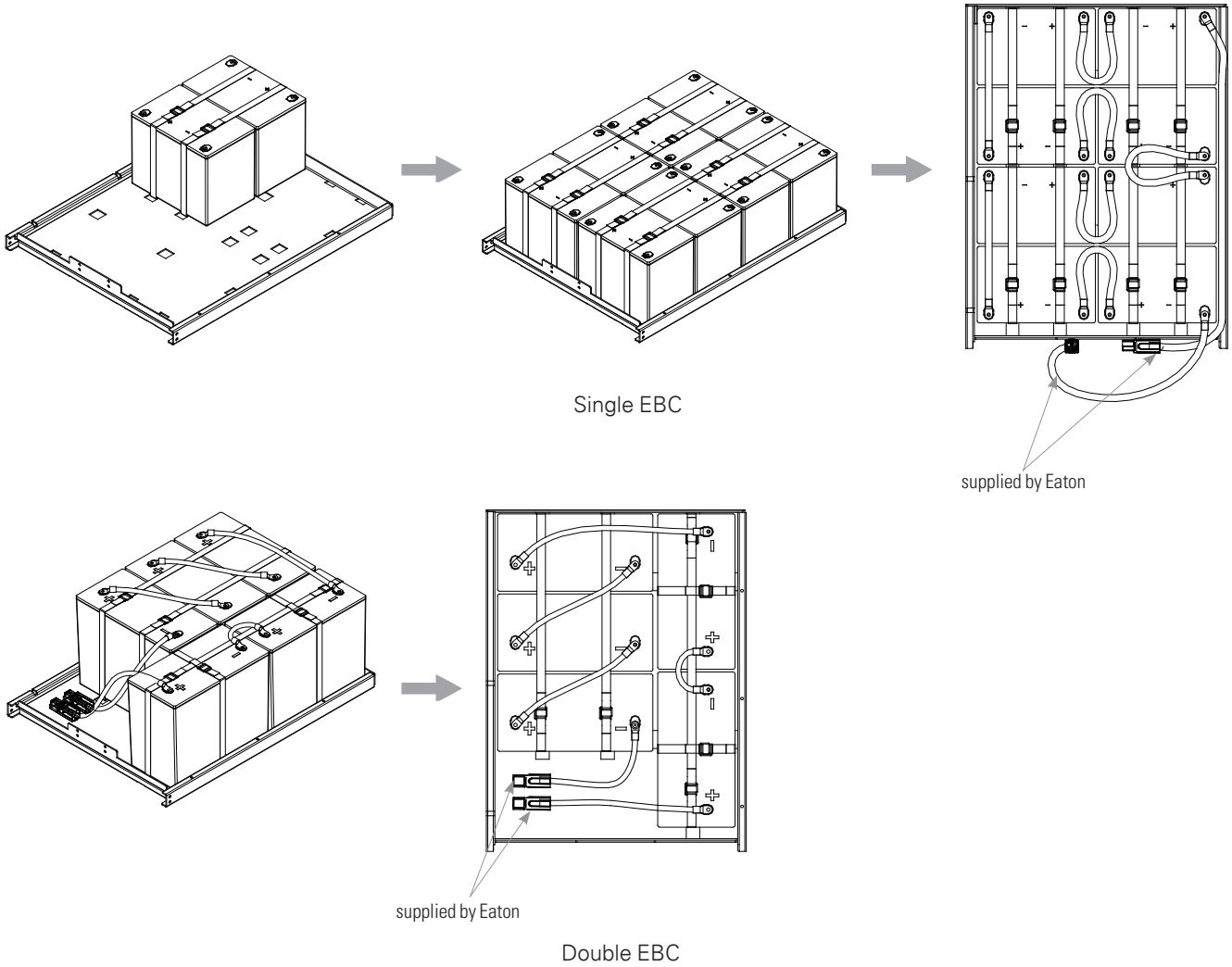

Figure 4-7. Battery and Battery Cable Installation

4.5 External Signaling Cables Connecting

NOTE To avoid the interface between the power cables and signal wires, please route the cables separate.

To install the signal wires:

Refer figure 4-8 to install the signal wires. The wire code is minimum 0.38mm^2.

1. Only one cabinet, Route and connect the signal wire from EBC RS232 to UPS Mini-slot. See figure 4-9 for wiring access information and terminal locations. Refer to the applicable Eaton UPS installation and operation manual for UPS signal terminal(mini-slot or relay card)locations.
2. If multi-cabinets are installed in parallel, proceed to step 3-5.
3. Route and connect the signal wire from EBC RS232 to UPS Mini-slot.
4. Route the positive and negative to the next battery cabinet. And connect the wire on the first cabinet terminal (To next (+)positive and (-)negative) and connect the other ends of cables on the second cabinet terminal(To last (+)positive and (-)negative) .See the figure 4-9 for terminal locations.
5. Repeat setp 4 to connect the other battery cabinet signal wires.

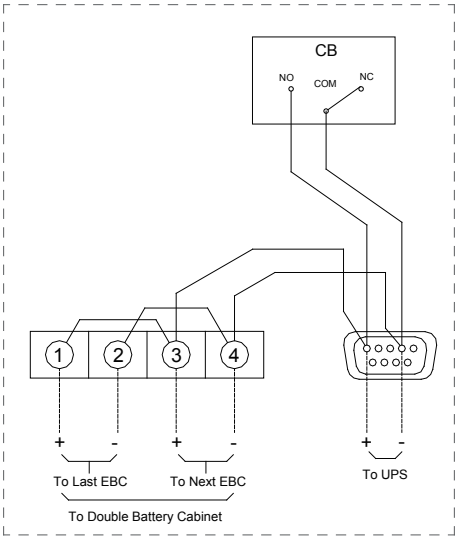

Figure 4-8. EBC Schematic for signal

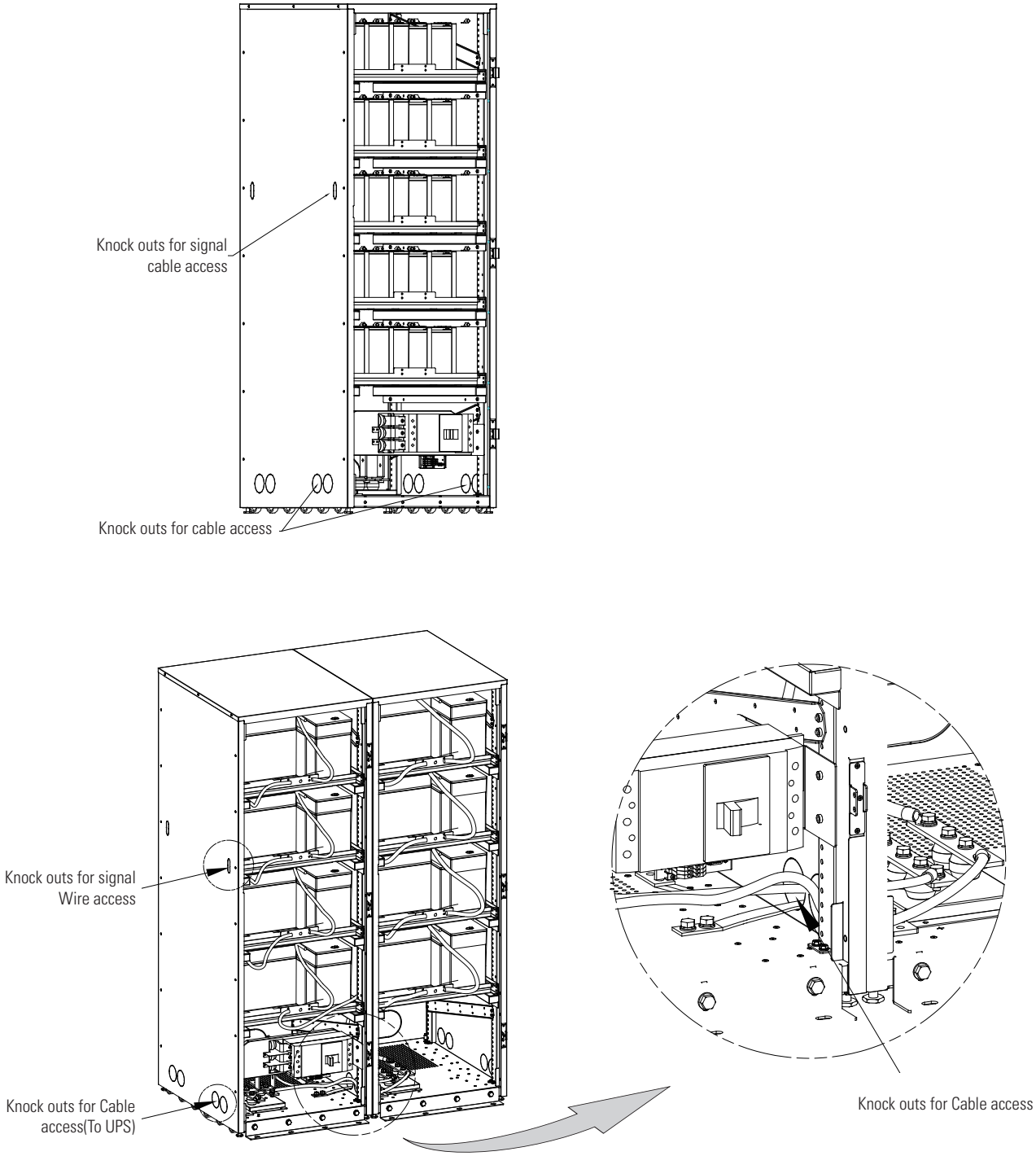

Figure 4-9. Interface Wiring Access

4.6 Initial Startup

Startup and operational checks must be performed by an authorized Eaton Customer Service Engineer, or the warranty terms specified become void. This service is offered as part of the sales contract for the EBC. Contact an Eaton service representative in advance (usually a two-week notice is required) to reserve a preferred startup date.

4.7 Completing the Installation Checklist

The final step in installing the EBC is completing the following Installation Checklist. This checklist ensures that you have completely installed all hardware, cables, and other equipment. Complete all items listed on the checklist to ensure a smooth installation. Make a copy of the Installation Checklist before filling it out, and retain the original.

After the installation is complete, an Eaton Customer Service Engineer must verify the operation of the UPS system and commission it to support the critical load. The service representative cannot perform any installation tasks other than verifying software and operating setup parameters. Service personnel may request a copy of the completed Installation Checklist to verify all applicable equipment installations have been completed.

NOTE The Installation Checklist MUST be completed prior to starting the UPS system for the first time.

Installation Checklist:

- All packing materials and restraints have been removed from each cabinet.
- The EBC is installed on a level floor suitable for computer or electronic equipment.
- The EBC is placed in its installed location
- All conduits and cables are properly routed between the EBC and the UPS.
- All power cables are properly sized and terminated.
- A ground conductor is properly installed.
- All terminal cover plates (if have) are installed.
- Air conditioning equipment is installed and operating correctly.
- The area around the UPS system is clean and dust-free.
- Adequate workspace exists around the EBC and other cabinets.
- Adequate lighting is provided around all EBC and UPS equipment.
- A 230 Vac service outlet is located within 7.5 metres (25 feet) of the EBC and UPS equipment
- Startup and operational checks are performed by an authorized Eaton Customer Service Engineer.

Notes

Chapter 5 Onelines and Schematics

5.1 Preliminary Installation Information

Figure 5-1 show the simplified internal structure of the battery cabinet and a simplified UPS and EBC intercabinet connection diagram.

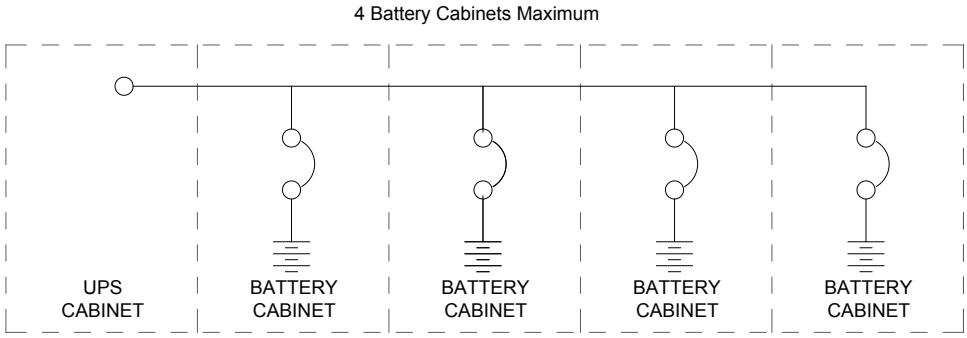

Figure 5-1. EBC-System online

5.2 Schematics

Figure 5-2 show the Single EBC and Double EBC schematics.

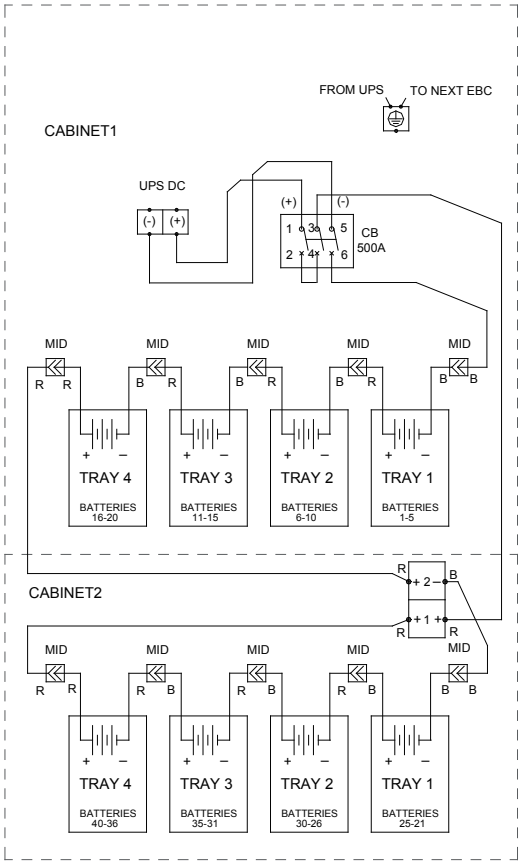

Eaton Double EBC schematic

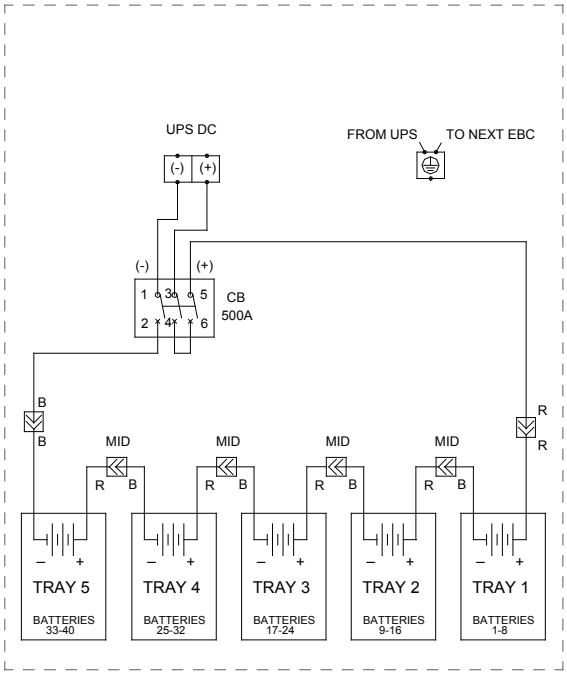

Eaton Single EBC schematic

Figure 5-2. EBC Schematics

Chapter 6 Maintenance

The components inside the EBC are secured to a sturdy metal frame. All repairable parts and assemblies are located for easy removal, with very little disassembly. This design allows authorized service personnel to perform routine maintenance and servicing quickly.

You must schedule periodic performance checks of the UPS system to keep it running properly. Regular routine checks of operation and system parameters enable your system to function efficiently for many trouble-free years.

6.1 Important Safety Instructions

Remember that your UPS system is designed to supply power EVEN WHEN DISCONNECTED FROM THE UTILITY POWER.

WARNING

- No user serviceable components.
- Servicing and maintenance should be performed by qualified service personnel only.
- LETHAL VOLTAGE PRESENT. This unit should not be operated with the cabinet doors open or protective panels removed. Do not make any assumptions about the electrical state of any cabinet in the UPS system.

6.2 Performing Preventive Maintenance

The UPS system requires very little preventive maintenance. However, the system should be inspected periodically to verify that the units are operating normally. Record maintenance results and any corrective actions in a suitable log.

6.2.1 DAILY Maintenance

Perform the following steps daily:

1. Check the area surrounding the UPS system. Ensure the area is not cluttered, allowing free access to the unit.
2. Ensure the air intakes on the Accessory cabinets are not blocked.
3. Ensure the operating environment is within the parameters specified in paragraph 3.2.1 and Chapter 7, "Product Specifications."

6.2.2 PERIODIC Maintenance

Periodic inspections of the EBC should be made to determine if components, wiring, and connections exhibit evidence of overheating. Particular attention should be given to the compression lug connections. Maintenance procedures should specify that the compression lug connections be re-torqued to values listed in this manual.

6.2.3 ANNUAL Maintenance

Annual preventive maintenance should be performed only by authorized service personnel familiar with maintenance and servicing of the UPS system. Contact an Eaton service representative for more information about service offerings.

6.2.4 BATTERY Maintenance

Contact an Eaton service representative for battery maintenance. Battery replacement and maintenance should be performed only by authorized service personnel.

6.3 Recycling the Used Batteries

Contact your local recycling or hazardous waste center for information on proper disposal of the used batteries or UPS.

WARNING

- Do not dispose of the battery or batteries in a fire. Batteries may explode. Proper disposal of batteries is required. Refer to your local codes for disposal requirements.
- Do not open or mutilate the battery or batteries. Released electrolyte is harmful to the skin and eyes. It may be toxic.
- A battery can cause electrical shock, burn from high short-circuit current, or fire. Observe proper precautions.

CAUTION

- Do not discard the UPS or the UPS batteries in the trash. This product contains sealed, lead-acid batteries and must be disposed of properly. For more information, contact your local recycling/ reuse or hazardous waste center.

- Do not discard waste electrical or electronic equipment (WEEE) in the trash. For proper disposal, contact your local recycling/reuse or hazardous waste center.

6.4 Maintenance Training

A basic training course, available from Eaton Corporation, gives you a competent working knowledge of the UPS system operation and teaches you how to perform first level corrective maintenance. For more information about training and other services, contact the Help Desk .see paragraph 1.7.

Chapter 7 Product Specifications

This section provides the following specifications:

- Model Numbers
- Battery specifications
- Battery runtimes
- Environmental and safety specifications

7.1 Specifications

The following sections detail the battery specifications, battery runtimes, and the environmental and safety specifications for the EBC.

7.1.1 Environmental specifications

Operating Temperature①	5°C – 40°C
Storage Temperature①	-25°C to 55°C
Transit temperature①	-25°C to 60°C
Humidity	5 % to 95 % maximum noncondensing
Enclosure Class per IEC 60529	IP21 with door opened
RoHS/WEEE	Required
Operating Altitude②	Maximum 1000m at 30°C without derating

① The recommended operational, storage and transit temperature with CSB and C&D batteries is generally max. 25°C. Please refer to the battery manufacturer's recommendations for accurate temperatures.

② Altitude-thermal de-rating as per EN62040-3:2011.

7.1.2 Battery specifications

Battery type	VRLA, 12 VDC
Battery quantity	93PM 30-50 kW units: 1) 36 blocks, 216 cells per battery string, 2V per cell. 2) 40 Blocks, 240 cells per battery string. 93PM 80-200 kW units: 1) 36 blocks, 216 cells per battery string, or 2) 40 blocks, 240 cells per battery string, 2V per cell. 93E 80-200 kVA units: 1) 36 blocks, 216 cells per battery string, or 2) 38 blocks, 228 cells per battery string, or 3) 40 blocks, 240 cells per battery string, 2V per cell. **Note! Battery strings with different battery quantity and voltage must not be connected in parallel!**
Battery Voltage	432 V (36 blocks) or 456V (38 blocks) or 480 V (40 blocks)