NOTES:
RCD: (xxx+/-.xxx) STD: .xxx+/-.xxx Key Dimension: *
1 RCD: Required Control Dimension ,These Dimensions need Process control & capability(initial and ongoing), 100%inspection, poke yoke, etc.as appropriate.
2 STD: Statistically Toleranced Dimension ,These Dimensions need demonstration of ongoing process capability (CpK/PpK).
3 Key Dimension:These Dimensions are defined by ME/Mfg,and need inspection as appropriate. If you want more information,please review the criterions of <TC-RDW-18>and<TC-QAW-40>

CONNECTION AND FUNCTIONAL DIAGRAM

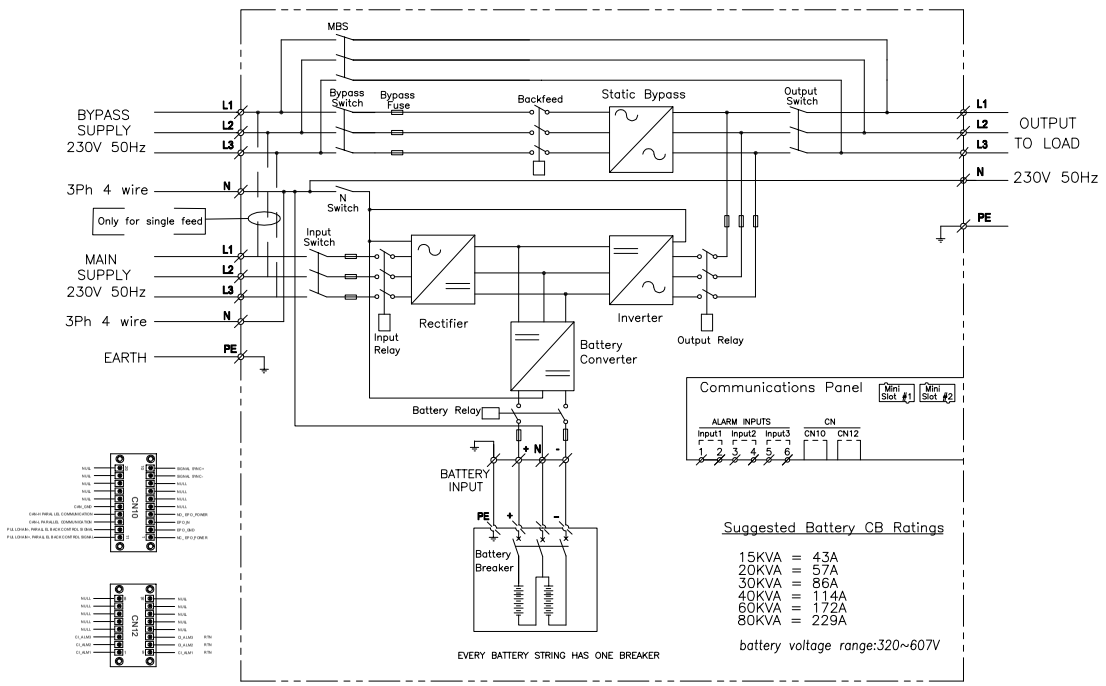

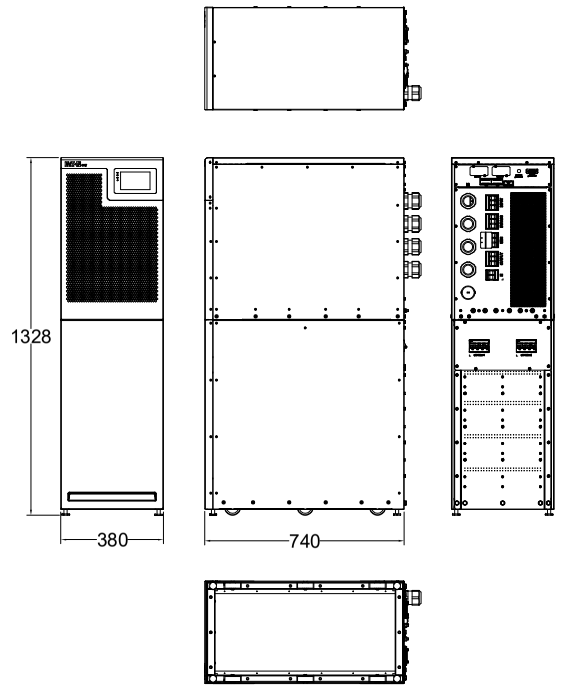

93T 15~30KVA
WITH INTERNAL BATTERY

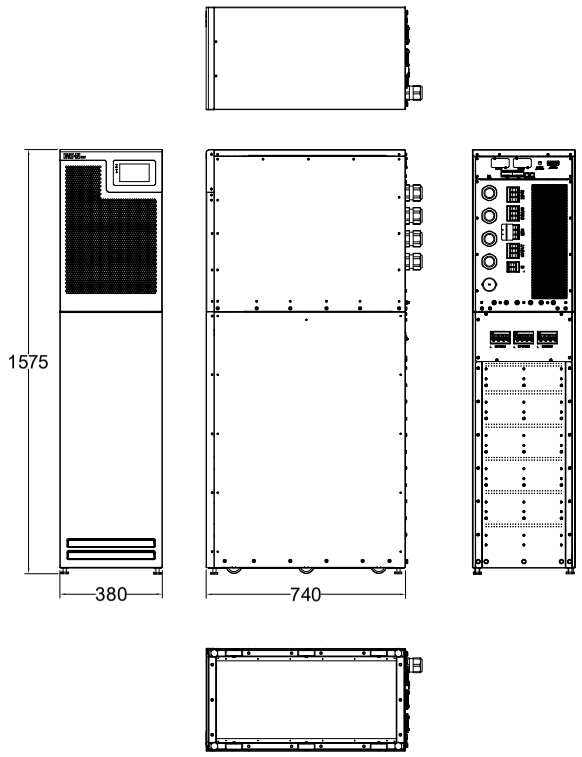

93T 40KVA
WITH INTERNAL BATTERY

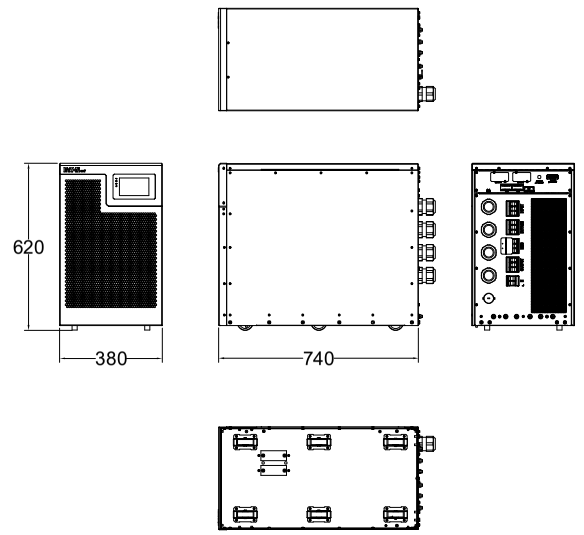

93T 15~40KVA
WITHOUT INTERNAL BATTERY

Rear Ventilation Clearance Requirements			
15~40KVA		60~80KVA	
L1(mm)	L2(mm)	L1(mm)	L2(mm)
≥600	≤50	≥600	≤50

L1:clearance to the rear wall
L2:clearance between the adjacent paralleled UPS or UPS adjacent PDU.
Paralleled UPS should be as close as possible.

UPS RATING		Related AC Input Voltage	Related AC Output Voltage	Rectifier AC Input Current		Bypass Input Current		Battery Current(36 batteries, 100% load at end of discharge)	Inverter AC Output Current	Input & Output Cable max size	Battery Cable max size	Earth Cable max size	Net Weight	Floor Loading	Air Flow Requirement
				Nominal	Maximum	Nominal	Maximum		Continuous						
KVA	KW	VOLT	VOLT	APM	APM	APM	APM	APM	APM	mm²	mm²	mm²	kg	Points/kg	Litres/s
15	15	400/230 -15/+20%	400/230	23	27	22	26	44	22	25	50	25	278	6/46.3	40.4
20	20			31	36	30	34	59	29	25	50	25	339	6/56.5	54
30	30			46	54	44	51	89	43	25	50	25	365	6/60.8	80.8
40	40			61	72	59	68	118	58	25	50	25	444	6/74	107.8
60	60			92	108	89	102	177	87	50	50x2	50	703	8/87.9	161.6
80	80			122	144	118	136	236	116	70	70x2	70	795	8/99.4	215.5

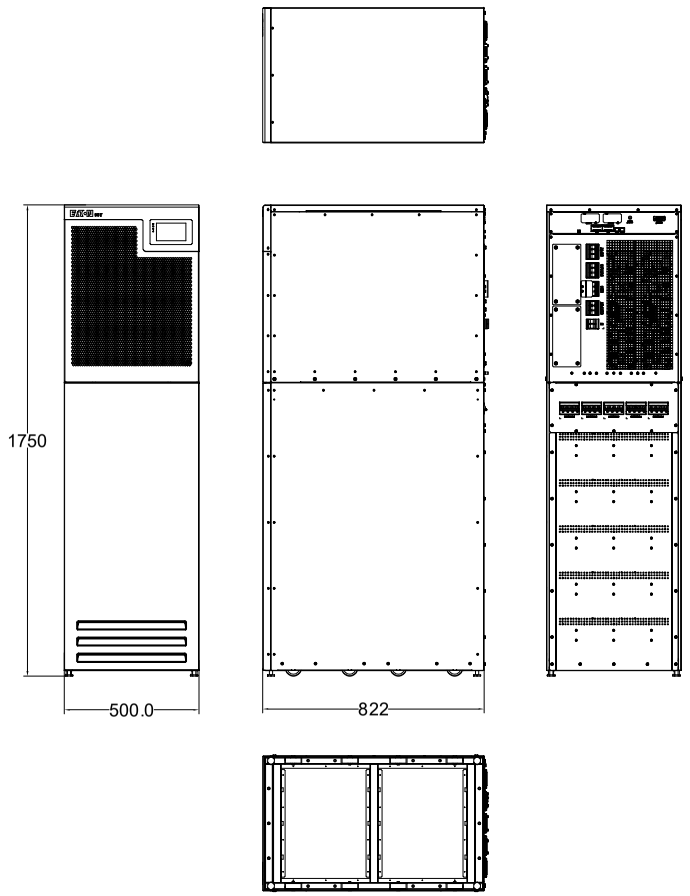

93T 60~80KVA
WITH INTERNAL BATTERY

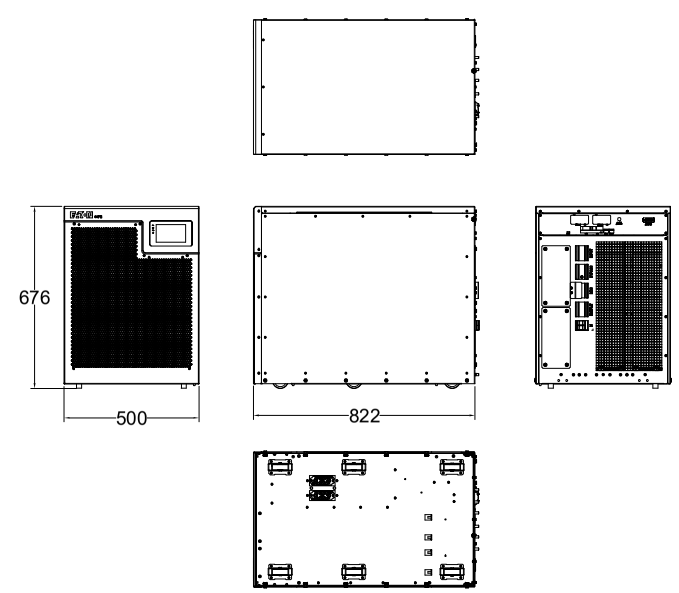

93T 60~80KVA
WITHOUT INTERNAL BATTERY

Notes:
1. The system must be installed on a level floor and in a clean environment suitable for electronic equipment.
2. Ambient temperature range: 0-40°C; Recommended operating range: 20-25°C; Maximum relative humidity: 95% non-condensing.
3. Minimum Clearances for ventilation & service around the UPS cabinet are:
   Overhead of UPS: 300mm clearance required for ventilation.
   Rear of UPS: Observe minimum clearance requirement for air flow. Refer to table.
   Front : 900mm clearance in front of the UPS cabinet is required for User & Service Access.
   Side : No clearance required.
4. Bottom cable entry at the Rear of cabinet or rear cable entry through removable gland plate.
5. All wiring and cabling is to be in accordance with National and Local Electrical Standards.
6. No provision for batteries with UPS cabinet.
7. Cabinet shown with bolt-down brackets fitted. These can be removed, UPS is fitted with wheels and leveling screws.

METRIC | THIRD ANGLE PROJECTION | EATON CORPORATION

DIMENSIONS ARE IN MILLIMETERS AFTER PLATING. DIMENSIONS AND TOLERANCES IN ACCORDANCE WITH ASME Y14.5M-1994. SEE NOTES FOR TOLERANCES.

DESCRIPTION:SITEPLAN_93T_15-80kVA

ORIGINATED:		ECO:	NAME:	REVISION:00	SIZE: A4
MODIFIED:					SCALE:
CHECKED:		DOCUMENT TYPE:		STATE:RELEASE	1:5
SAFETY:		PRO-E DRAWING			SHEET:
APPROVED:					1 OF 2

EATON CORPORATION - CONFIDENTIAL AND PROPRIETARY
NOTICE TO PERSONS RECEIVING THIS DOCUMENT AND/OR TECHNICAL INFORMATION
THIS DOCUMENT, INCLUDING THE DRAWING AND INFORMATION CONTAINED THEREON, IS CONFIDENTIAL AND IS THE EXCLUSIVE PROPERTY OF EATON CORPORATION AND (EMBER) YON LOAN AND SUBJECT TO RECALL BY EATON. ANY TRADE SECRETS, TRADEMARKS, OR COPYRIGHTS CONTAINED THEREIN, AS WELL AS ANY PATENT RIGHTS DISCLOSED THEREIN, MUST NOT BE USED OR PLACED INTO PRODUCTION OR EXPLOITED IN ANY MANNER WITHOUT THE PRIOR WRITTEN CONSENT OF EATON. IN THE CASE OF CONFLICTING CONTRACTUAL PROVISIONS, THIS NOTICE SHALL GOVERN THE STATUS OF THIS DOCUMENT.
EATON CORPORATION - CONFIDENTIAL